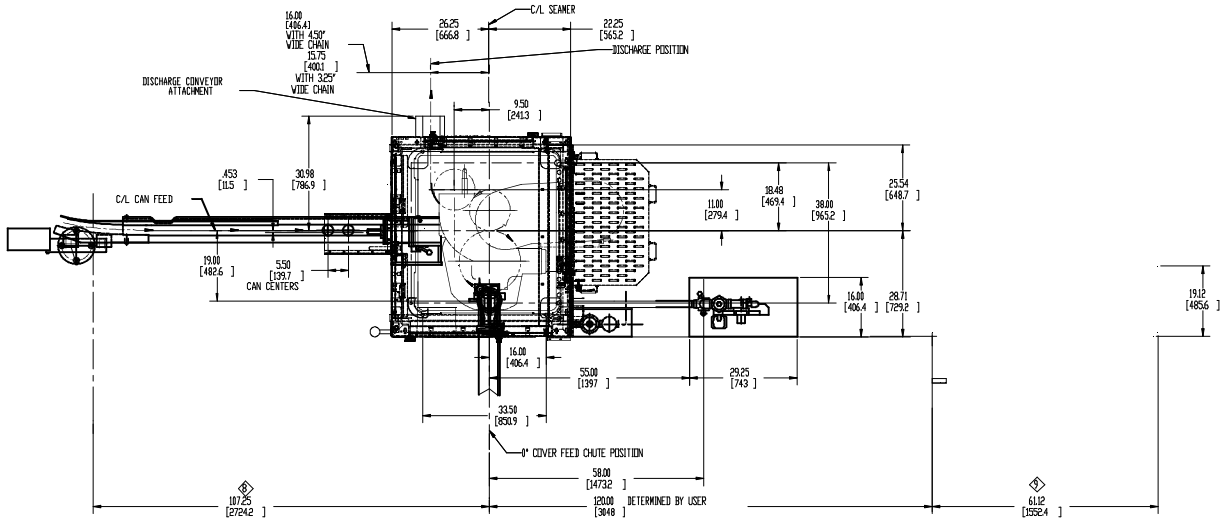


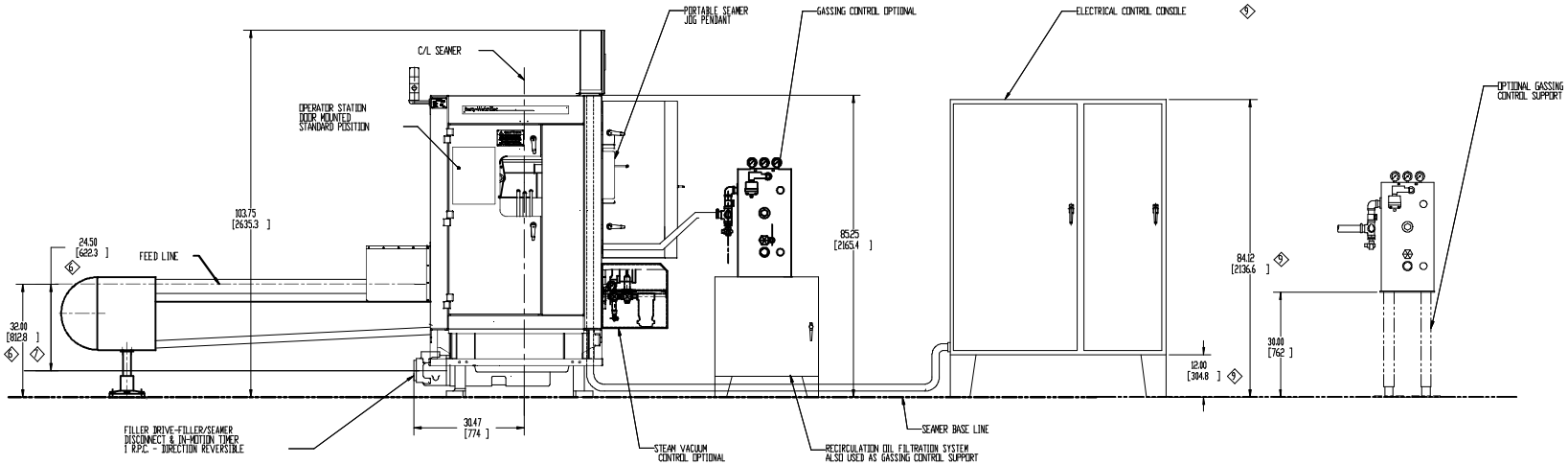


9 DIMENSIONS CAN BE CHANGED DUE TO DIFFERANT TYPES OF DRIVES AND CONTROLS. CHECK WITH PSANGELUS ELECTRICAL ENGINEERINGDEPARTMENT FOR FINAL DIMENSIONS.

8 DIMENSION VARY DEPENDING ON FILLER MODELS

7 FEED LINE HEIGHT ADJUSTABLE ±50

6 ADD .44 FOR RAISED FEED LINE OPTION

5. DIMENSIONS IN PARENTHESIS ARE (MM)

| REV | ZONE | DATE |
|---|---|---|
| | | |

REVISIONS

UTILITY: D-78546
INSTALLATION: D-78547

62H REF D-78154
62H REF D-78584

62H/63H WITH BASE MOUNTED
PINIONS

NAME MODEL

PSANGELUS

SW

| | | | |
|---|---|---|---|
| 7 | | 3. FINISH: PAINTED GOLDEN AS MARKED<br>4. PAINT: ENAMEL SPECIFIED AS<br>5. DIMENSIONS ARE IN DECIMAL INCHES<br>6. BREAK ALL SHARP EDGES<br>MATERIALS OTHERWISE SPECIFIED | 8. TOLERANCES UNLESS OTHERWISE SECONDS: 2- Deg 30<br>3- ±.005<br>2- ±.010<br>3- ±.005<br>.005- ±.005<br>.000- ±.005 |
| 6 | | | |
| 5 | | | |
| 4 | | | |
| 3 | | | |
| 2 | | | |
| 1 | | | |
| ITEM | COMMERCIAL PARTS | REQ | |

| | | | |
|---|---|---|---|
| DRAWN BY: R.SHUSTICK | DATE: 03-17-09 | MATERIAL | PART NO: FLOOR PLAN |
| CHECKED BY | DATE | | DWG NO: D-78545 |
| APPROVED BY | APPVD: CL | TREATMENT | NAME: 62H/63H CANNERY |
| | SCALE: 1/16 x SIZE | | |